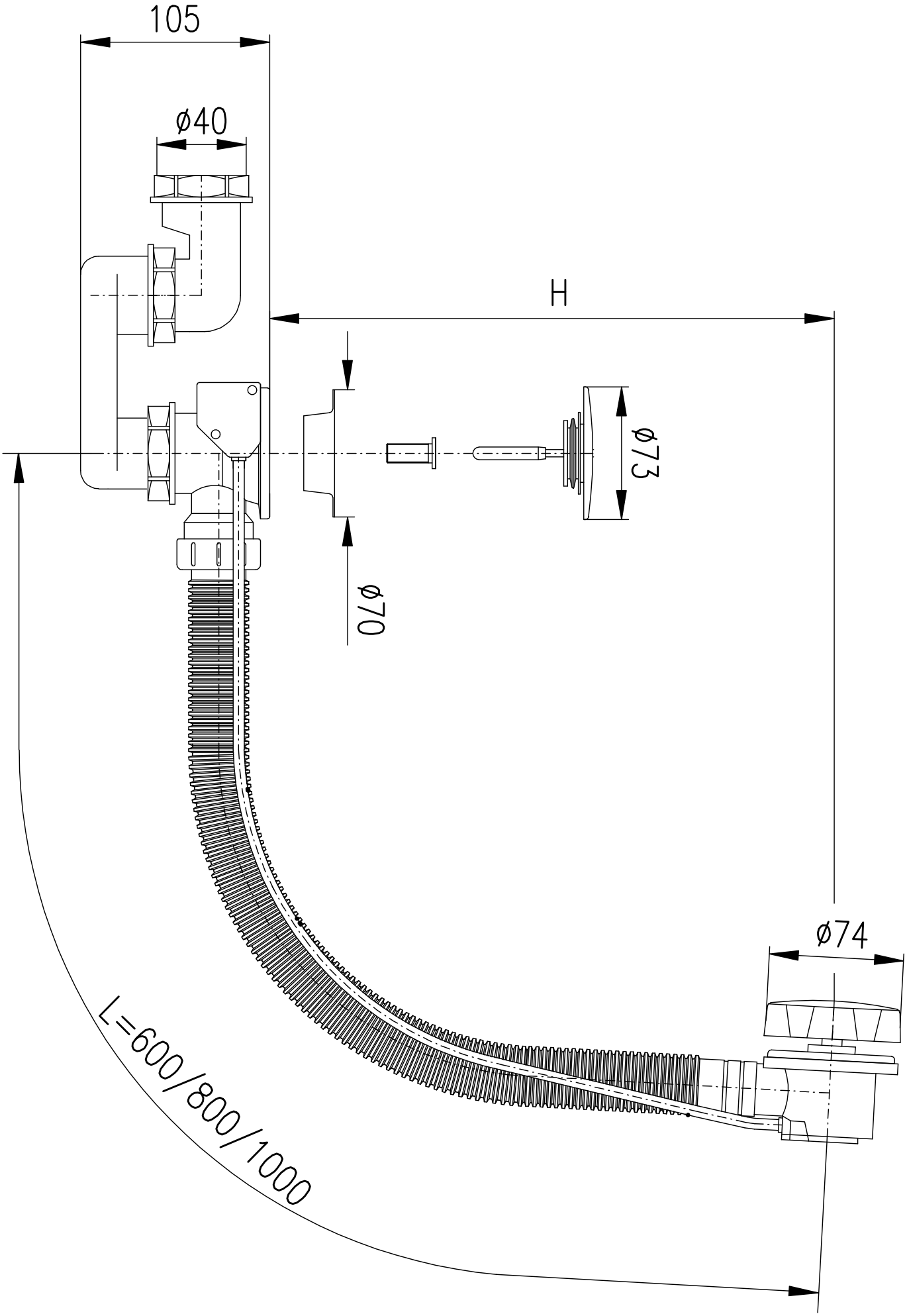
105
ø40
H
ø73
ø70
ø74
L=600/800/1000