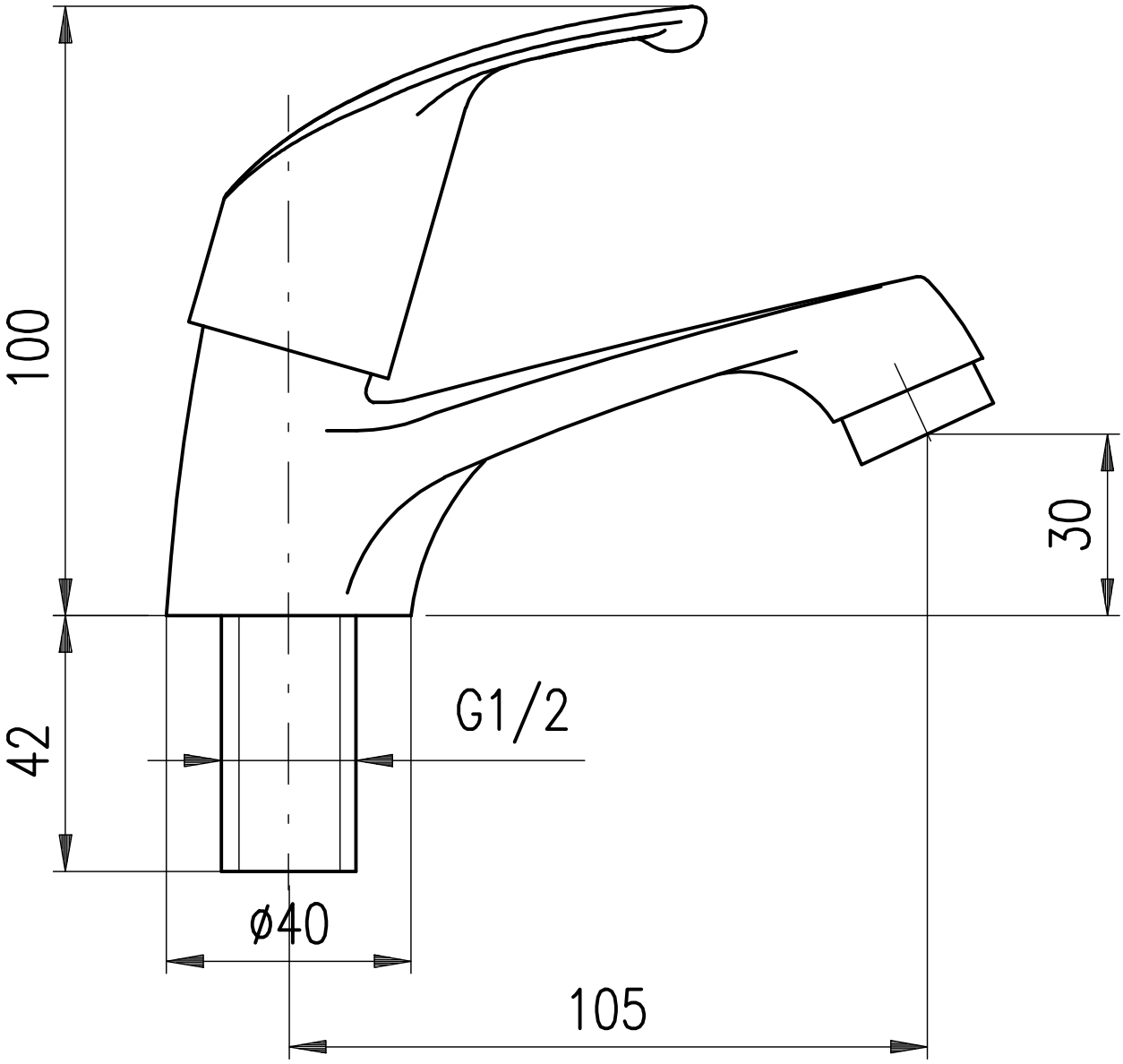
100
30
42
G1/2
ø40
105