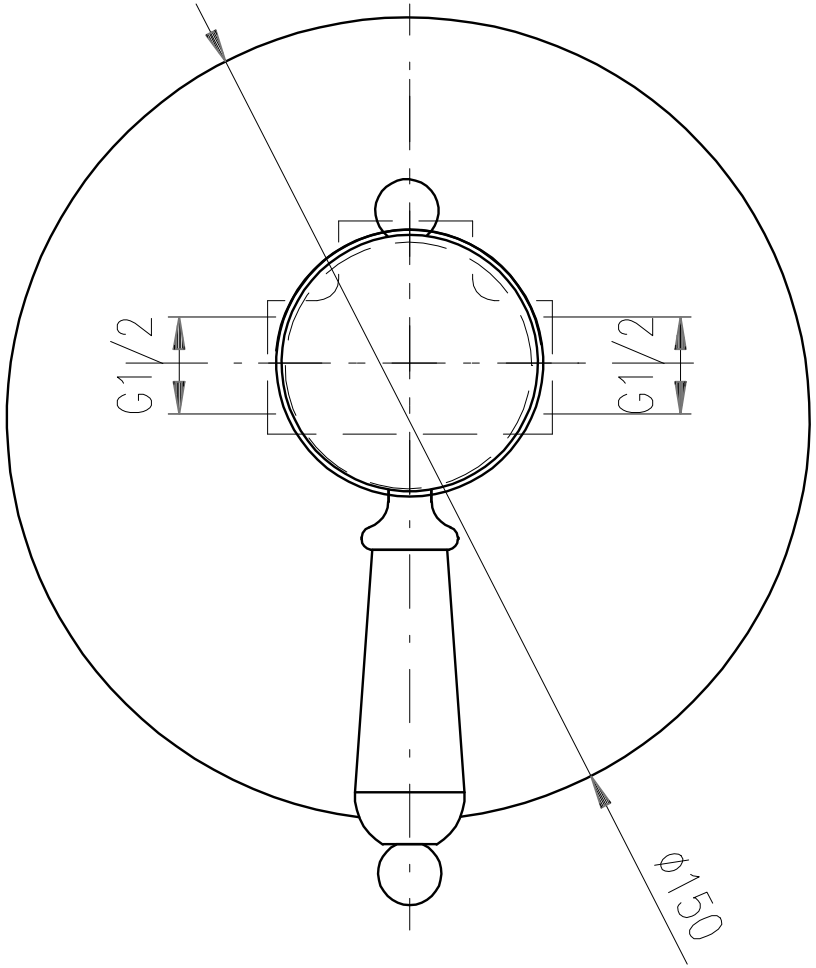
G1/2
G1/2
ϕ150

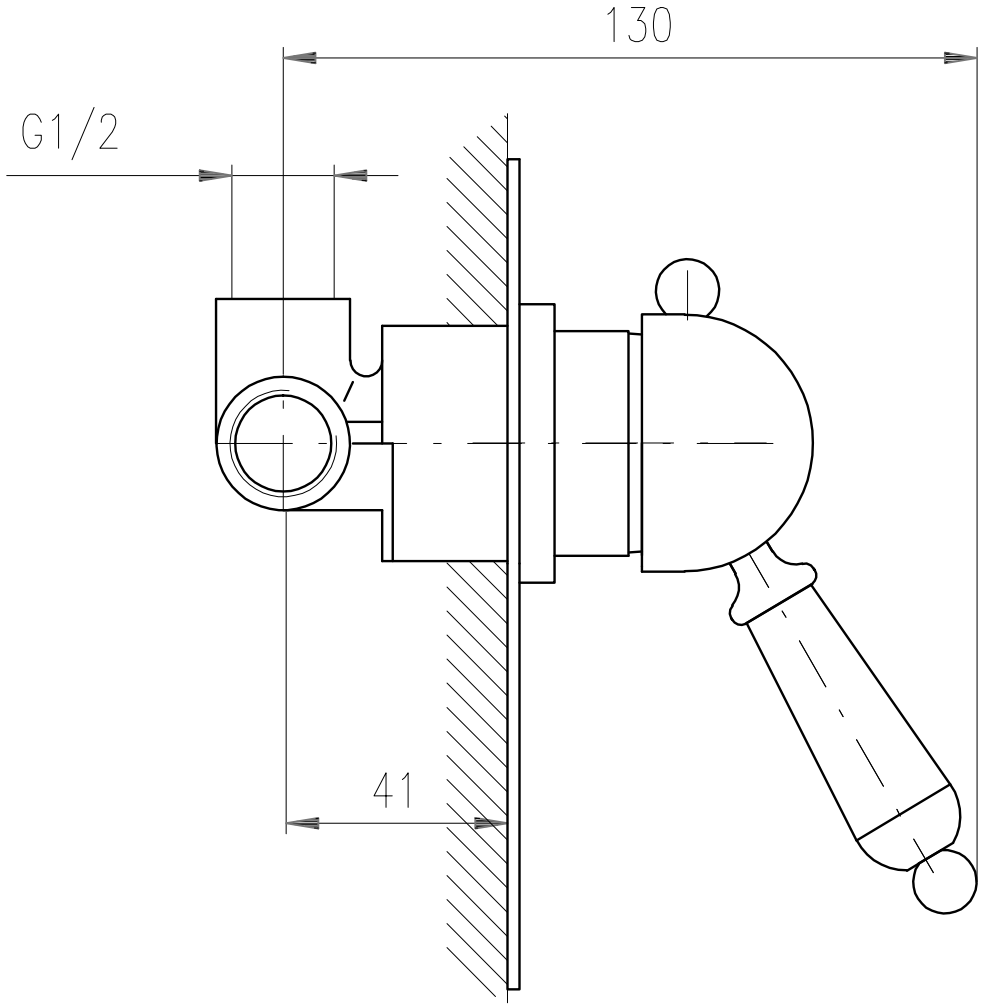
130
G1/2
41