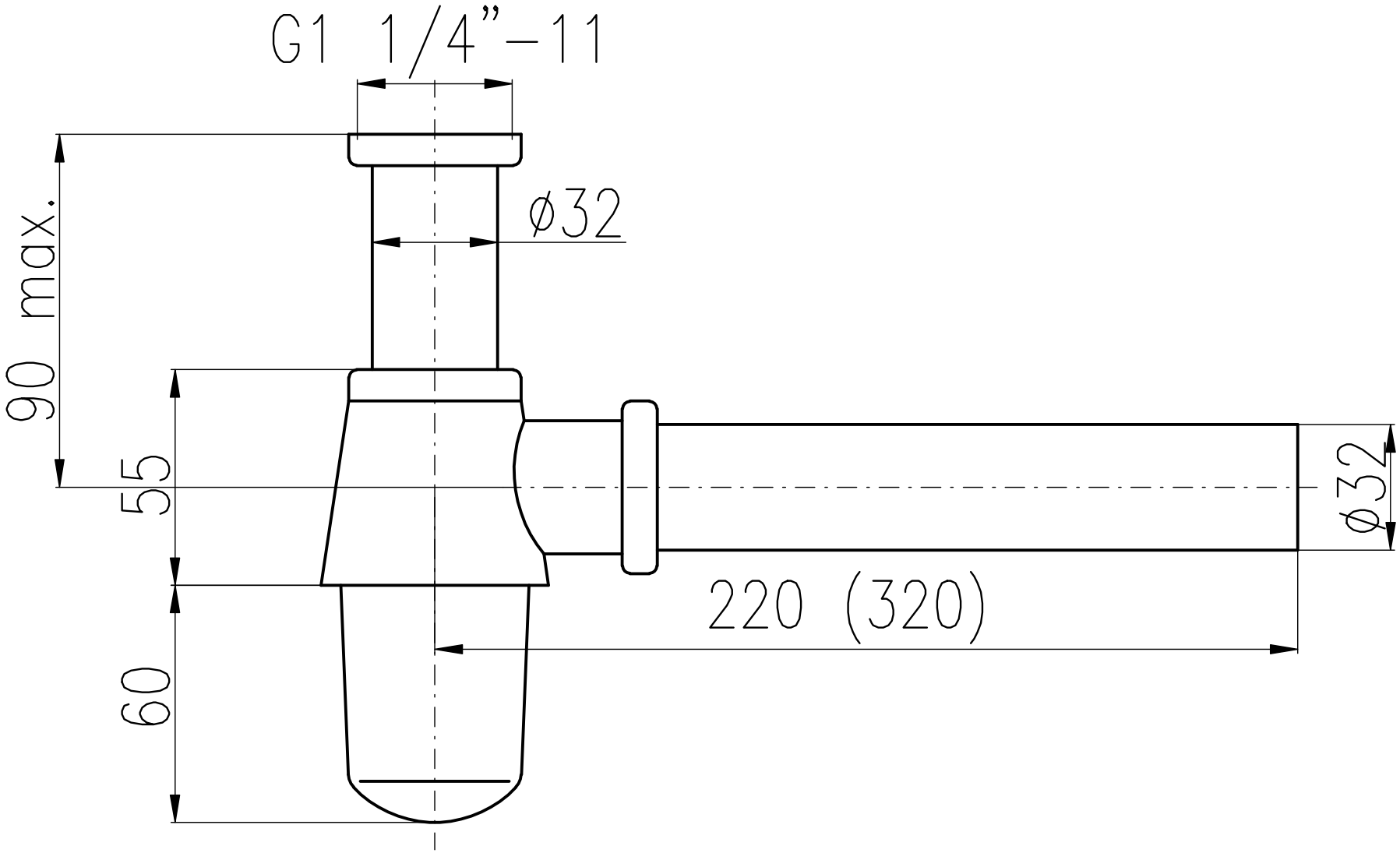
G1 1/4”–11
ø32
90 max.
55
60
220 (320)
ø32