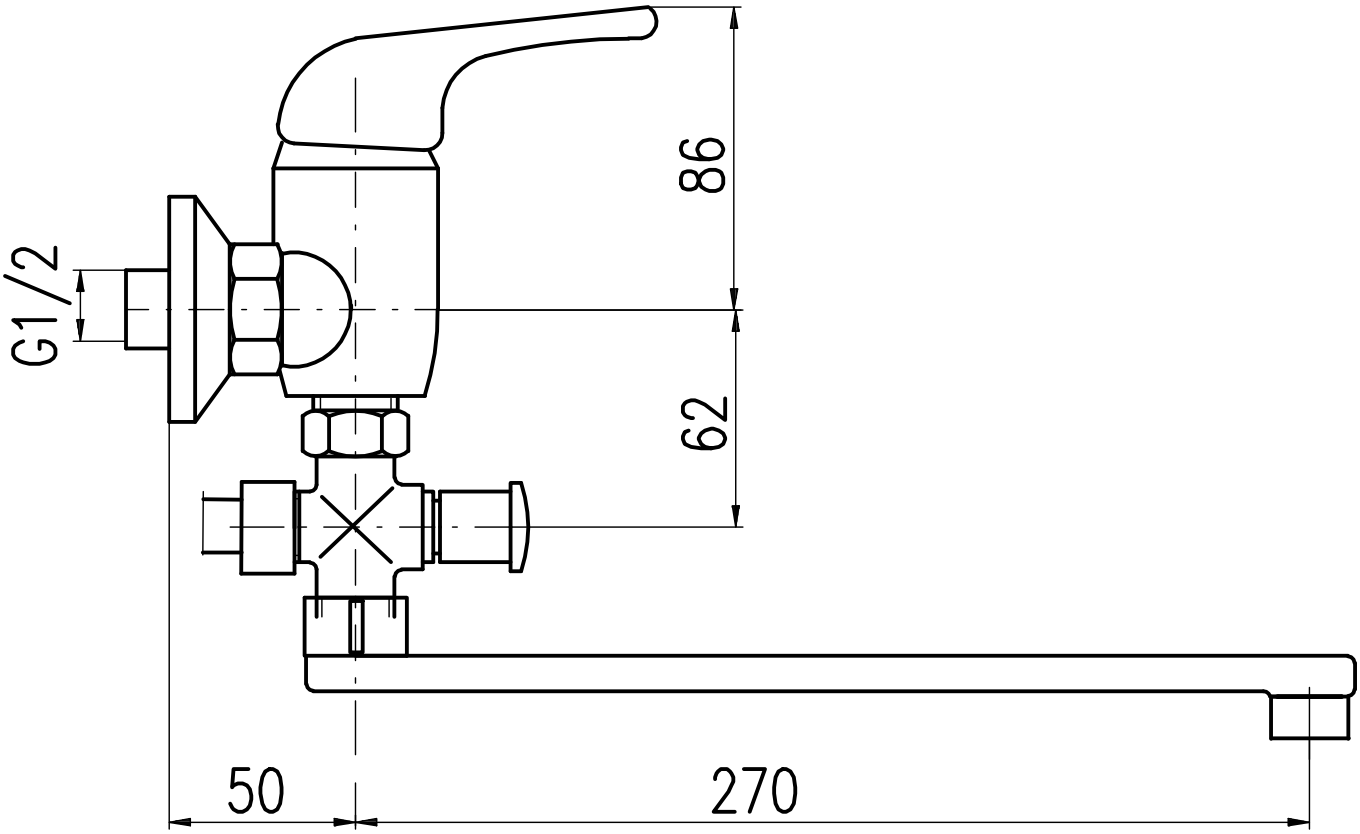
86
G1/2
62
50
270

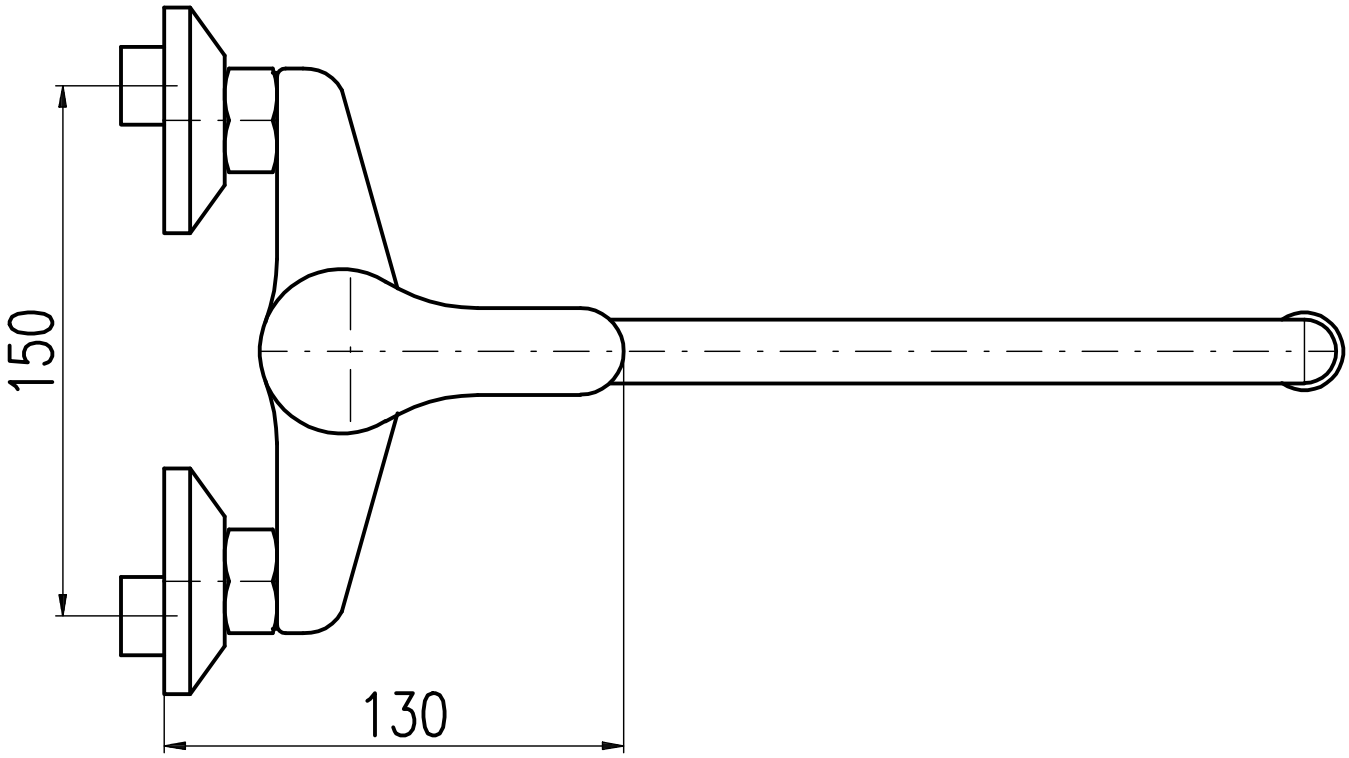
150
130