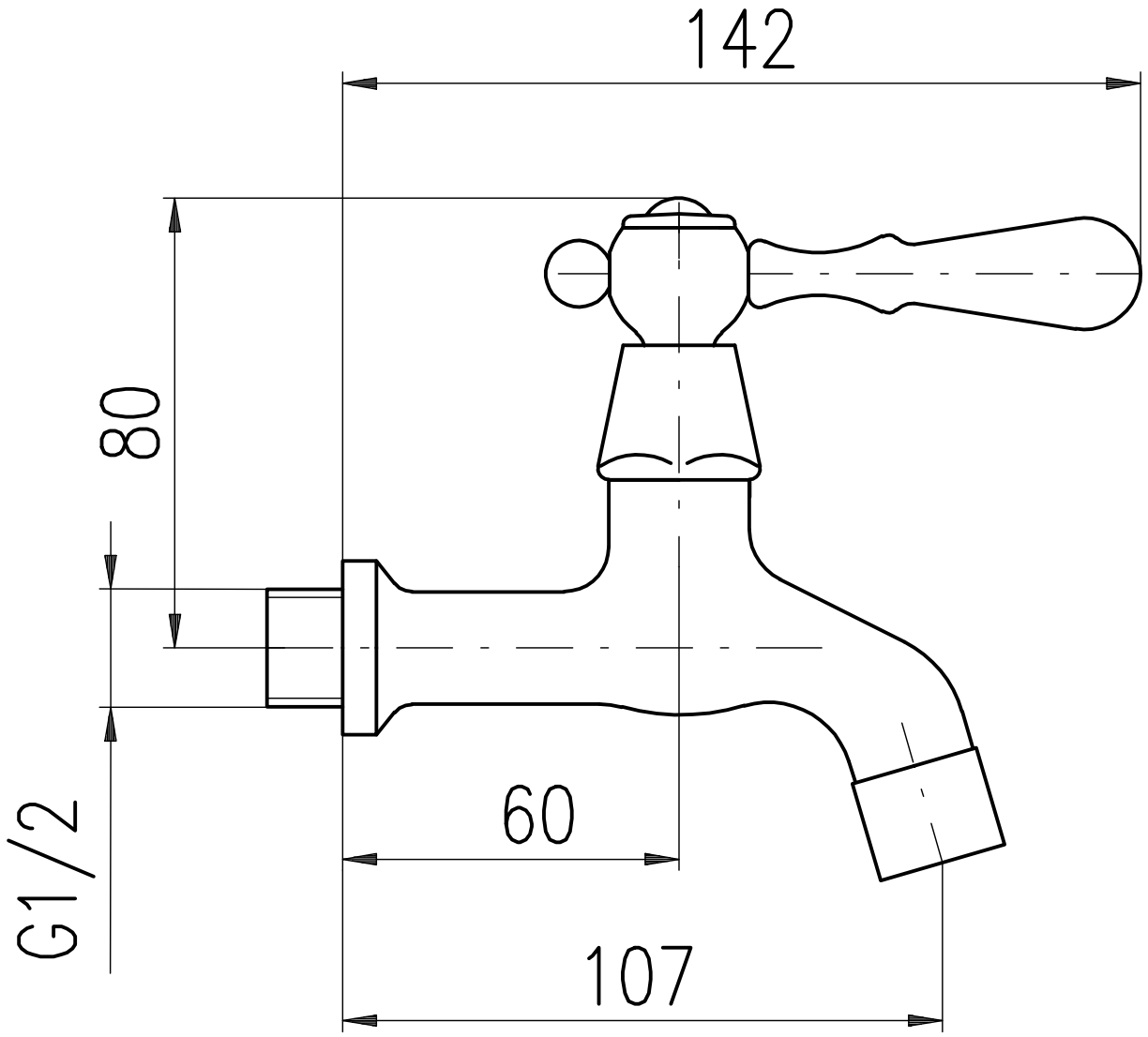
142
80
G1/2
60
107